LEDWPC20W/30W 20 & 30 Watt LED Area Light

Project:	
Type:	
Catalog #:	

STANDARD

The LEDWPC20W/30W is a contemporary, commercial-grade area luminaire, which can be wall-, ground- or pole-mounted to provide outdoor perimeter, area, and floodlighting. With a die cast aluminum housing and a tempered glass lens, the LEDWPC20W/30W will stand up to many years of punishing environmental conditions. High-efficacy, long-life LEDs provide both energy and maintenance cost savings compared to traditional, HID area lights.

FEATURES

- *Available in 4000k (neutral white) and 5000k (cool white) color temperatures.**
- *Long-life LEDs provide 102,000 (LEDWPC20W) or 79,000 (LEDWPC30W) hours of operation with at least 70% of initial lumen output (L_{70}).***
- *LEDWPC20W delivers 1,765 lumens and 84 lumens per watt (LPW) at 4000k, and 1,874 lumens and 89 LPW at 5000k.**
- *LEDWPC30W delivers 2,688 lumens and 90 LPW at both 4000k and 5000k.**
- *Universal 100-277 AC voltage (50-60Hz) is standard.*
- *Power factor > 0.90.*
- *Total harmonic distortion < 20%.*
- *Color rendering index > 80.*
- *Die cast aluminum housing with durable, dark bronze, powder coat paint.*
- *Tempered glass lens.*
- *Removable, threaded plugs for side attachment of ½" rigid electrical conduit, or for button photocells.*
- *Easy installation in new construction or retrofit.*

** Contact factory for other color temperatures and lumen packages.*
*** L_{70} hours are IES TM-21-11 calculated hours.*

WARRANTY & LISTINGS

- *cULus listed for wet locations (-20°C to 40°C / -4°F to 104°F)*
- *IP65 rated.*
- *DLC approved.*
- *Tested and approved to UL1598, UL8750 and IEC60598 safety standards.*
- *5-year warranty on all electronics and housing.*

MOUNTING OPTIONS

- *Wall-mount plate is standard.*
- *Trunnion-mount option provides secure attachment to flat surfaces.*
- *Die-cast knuckle-mount option is installed on a junction box. Includes ½" NPS stem with locking nut.*

Trunnion Mount (LEDWPC-TM)

Knuckle Mount (LEDWPC-KM)

DIMENSIONS

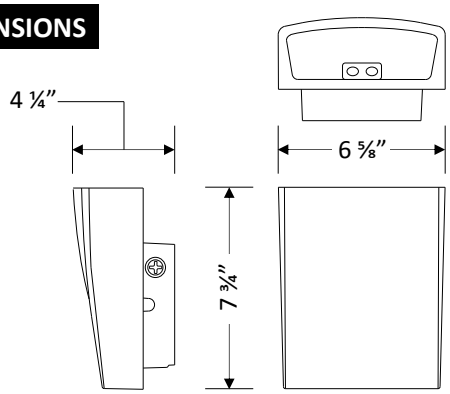

ORDERING INFORMATION

Example: LEDWPC20W-4K + LEDWPC-TM

Model	Luminaire Watts	Luminaire Lumens	Lumens Per Watt	Color Temperature	Mounting Options (Order Separately)
LEDWPC20W-4K	21	1,765	84	4K = 4000k	Trunnion Mount — LEDWPC-TM
LEDWPC20W-5K	21	1,874	89	5K = 5000k	Knuckle Mount — LEDWPC-KM
LEDWPC30W-4K	30	2,688	90	4K = 4000k	
LEDWPC30W-5K	30	2,688	90	5K = 5000k	

LEDWPC20W/30W 20 & 30 Watt LED Area Light

ELECTRICAL

Model	Color Temperature	CRI [1]	Luminaire Lumens	Luminaire Watts	Lumens Per Watt	Input Voltage	Input Current (A)			Power Factor	THD [2]	L_{70} Hours [3]
							120V	240V	277V			
LEDWPC20W-4K	4000k	> 80	1,765	21	84	120-277 (50-60Hz)	0.18	0.09	0.08	> 90%	< 20%	102,000
LEDWPC20W-5K	5000k	> 80	1,874	21	89	120-277 (50-60Hz)	0.18	0.09	0.08	> 90%	< 20%	102,000
LEDWPC30W-4K	4000k	> 80	2,688	30	90	120-277 (50-60Hz)	0.25	0.13	0.11	> 90%	< 20%	79,000
LEDWPC30W-5K	5000k	> 80	2,688	30	90	120-277 (50-60Hz)	0.25	0.13	0.11	> 90%	< 20%	79,000

[1] Color rendering index

[2] Total harmonic distortion

[3] L_{70} refers to the number of hours at which lumen output declines to 70% of the initial level. L_{70} hours are IES TM-21-11 calculated hours.

PHOTOMETRIC DATA

LEDWPC20W-4K (1,765 Lumens)

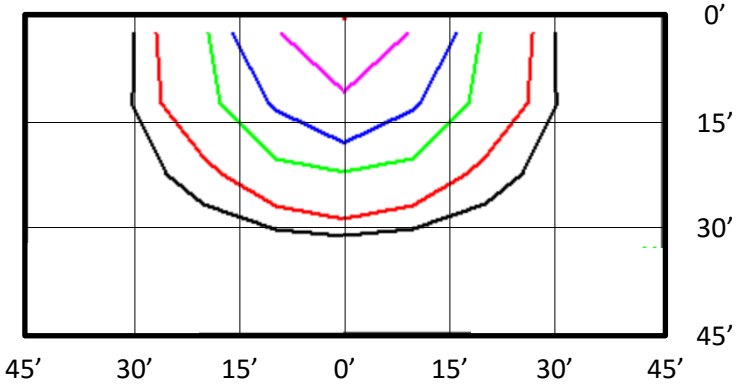

Luminaire Orientation:

BUG Rating: B1-U1-G0

Zone		Lumens	%
FL	- Front - Low (0-30)	363	21%
FM	- Front - Medium (30-60)	743	42%
FH	- Front - High (60-80)	123	7%
FVH	- Front - Very High (80-90)	1	0%
Total Forward Light		1,230	70%
BL	- Back - Low (0-30)	297	17%
BM	- Back - Medium (30-60)	218	12%
BH	- Back - High (60-80)	19	1%
BVH	- Back - Very High (80-90)	0	0%
Total Back Light		534	30%
UL	- Up Light - Low (90-100)	0	0%
UH	- Up Light - High (100-180)	1	0%
Total Up Light		1	0%
Total Lumens		1,765	100%

LEDWPC30W-4K (2,688 Lumens)

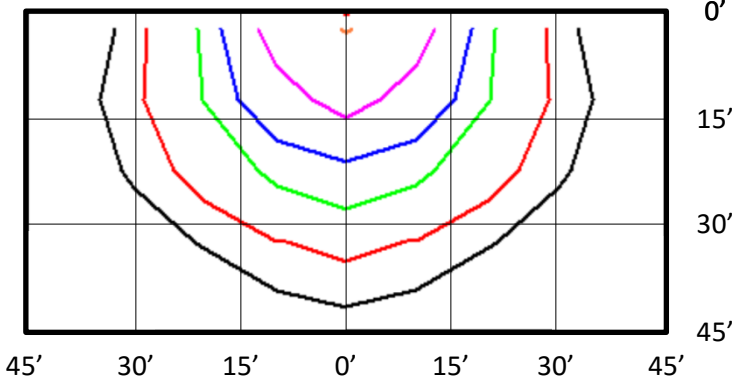

Luminaire Orientation:

BUG Rating: B1-U1-G0

Zone		Lumens	%
FL	- Front - Low (0-30)	513	19%
FM	- Front - Medium (30-60)	1,103	41%
FH	- Front - High (60-80)	301	11%
FVH	- Front - Very High (80-90)	1	0%
Total Forward Light		1,919	71%
BL	- Back - Low (0-30)	399	15%
BM	- Back - Medium (30-60)	341	13%
BH	- Back - High (60-80)	27	1%
BVH	- Back - Very High (80-90)	1	0%
Total Back Light		767	29%
UL	- Up Light - Low (90-100)	0	0%
UH	- Up Light - High (100-180)	2	0%
Total Up Light		2	0%
Total Lumens		2,688	100%

Foot Candles

- 5.0
- 2.0
- 1.0
- 0.5
- 0.2
- 0.1

Notes:

- *Isofootcandle plots depict initial footcandles at grade.*
- *Gridlines represent units of mounting height of 15 feet.*