LEDSL30W 30 Watt LED Landscape Security / Flood Light

Project:	
Type:	
Catalog #:	

STANDARD

The LEDSL30W landscape security / flood light is an ideal solution for general site, landscape, sign and pathway lighting. With a die cast aluminum housing, a fluted reflector for even light distribution, and a tempered glass lens with seamless silicone gasket to prevent leaks, the LEDSL30W will stand up to many years of punishing environmental conditions. High-efficacy, long-life LEDs provide both energy and maintenance cost savings compared to traditional, incandescent landscape lights.

FEATURES

- *Available in 3000k (warm white) and 5000k (cool white) color temperatures.**
- *Long-life LEDs provide 109,000 hours of operation with at least 70% of initial lumen output (L_{70}).***
- *Delivers 2,501 lumens and 86 lumens per watt.**
- *Universal 100-277 AC voltage (50-60Hz) is standard.*
- *Power factor > 0.90.*
- *Total harmonic distortion < 20%.*
- *Color rendering index > 70.*
- *Die cast aluminum housing with durable, dark bronze, powder coat paint.*
- *Fluted reflector for even light distribution.*
- *Tempered glass lens with seamless silicone gasket to prevent leaks.*
- *Easy installation in new construction or retrofit.*

** Contact factory for other color temperatures and lumen packages.*
*** L_{70} hours are IES TM-21-11 calculated hours.*

WARRANTY & LISTINGS

- *cULus listed for wet locations (-20°C to 40°C / -4°F to 104°F).*
- *IP65 rated.*
- *DLC approved (5000k model only).*
- *5-year warranty on all electronics and housing.*

MOUNTING OPTIONS

- *Threaded pipe (NPS ½"), which attaches to a junction box, is standard.*
- *Optional spike-mount (LEDSL-BS) for ground mounting.*
- *Optional canopy-mount (LED-CNY-KIT) for attachment to flat surfaces.*

Spike-Mount (LEDSL-BS)

Canopy-Mount (LED-CNY-KIT)

DIMENSIONS

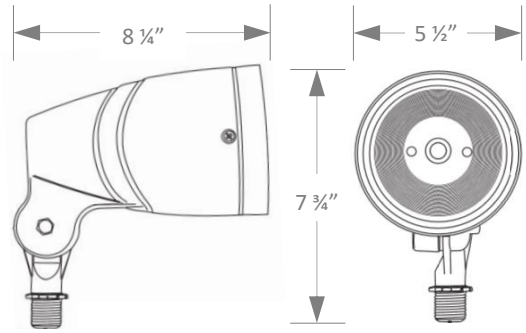

ORDERING INFORMATION

Model	Luminaire Watts	Luminaire Lumens	Lumens Per Watt	Color Temperature	Mounting Options (Order Separately)
LEDSL30W3K	29	2,501	86	3K = 3000k	Spike Mount = LEDSL-BS
LEDSL30W5K	29	2,501	86	5K = 5000k	Canopy Mount = LED-CNY-KIT

LEDSL30W 30 Watt LED Landscape Security / Flood Light

ELECTRICAL

Model	Color Temperature	CRI [1]	Luminaire Lumens	Luminaire Watts	Lumens Per Watt	Input Voltage	Input Current (A)			Power Factor	THD [2]	L_{70} Hours [3]
							120V	240V	277V			
LEDSL30W3K	3000k	> 70	2,501	29	86	120-277 (50-60Hz)	0.24	0.12	0.10	> 90%	< 20%	109,000
LEDSL30W5K	5000k	> 70	2,501	29	86	120-277 (50-60Hz)	0.24	0.12	0.10	> 90%	< 20%	109,000

[1] Color rendering index

[2] Total harmonic distortion

[3] L_{70} refers to the number of hours at which lumen output declines to 70% of the initial level. L_{70} hours are IES TM-21-11 calculated hours.

PHOTOMETRIC DATA

LEDSL30W5K (2,501 Lumens)

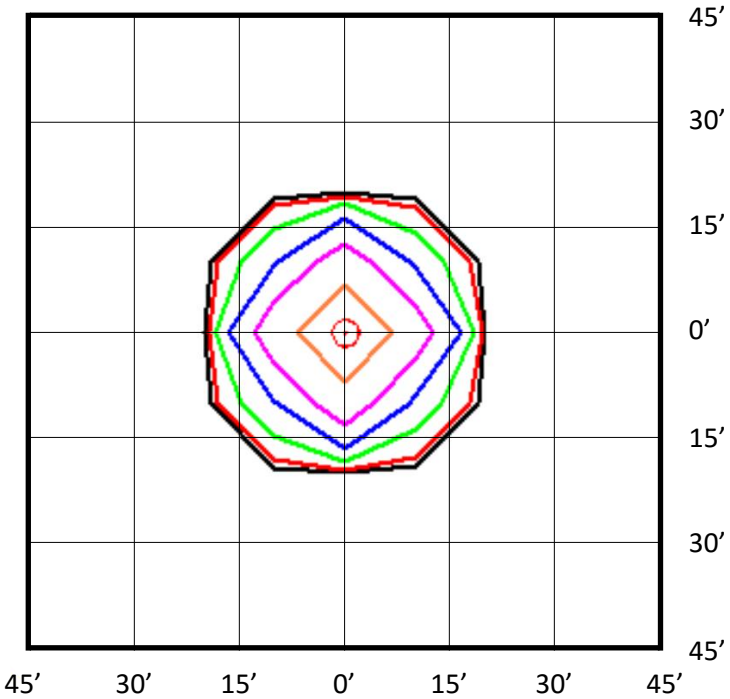

Luminaire Orientation

Foot Candles
- 5.0
- 2.0
- 1.0
- 0.5
- 0.2
- 0.1

Notes:

- *Isofootcandle plots depict initial footcandles at grade.*
- *Gridlines represent units of mounting height of 15 feet.*